CT 9-12

Dimensions (mm)

Standard Terminal (mm)

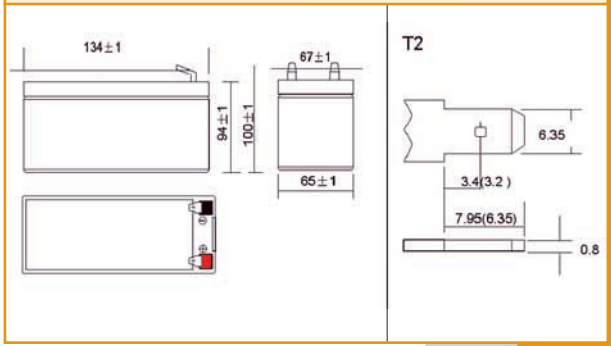

Discharging Current & Discharge Duration Time

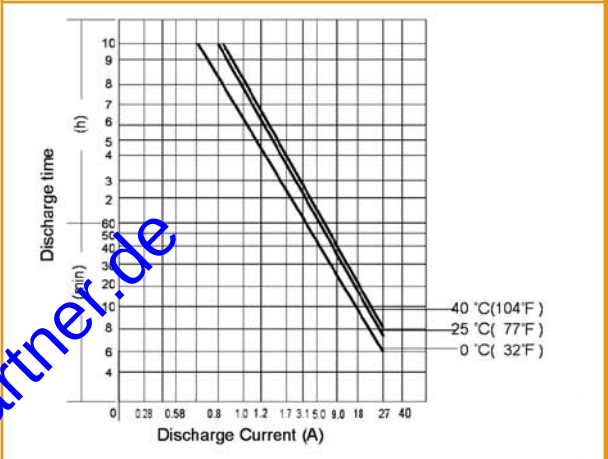

Physical Specification

Nominal Voltage		12V
Nominal Capacity (20HR)		8.0AH
Dimension	Length	151±1mm (5.95 inches)
	Width	65±1mm (2.56 inches)
	Container Height	94±1mm (3.70 inches)
	Total Height (with Terminal)	100±1mm (3.94 inches)
Weight		Approx 2.75kg (6.06lbs)
Standard Terminal		T2

Discharge Characteristics (25°, 77°F)

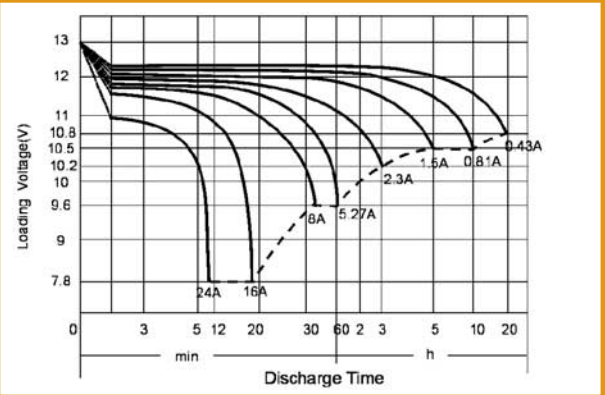

Electrical Specification

Rated Capacity	20 hour rate (430mA)	8.6AH	Constant-Voltage Charge	Cycle	Initial Charging Current less than2.7A.Voltage 14.4V~ 15.0V at 25°C (77°F) Temp. Coefficent -30mV/°C
	10 hour rate (810mA)	8.1AH			
	5 hour rate (1.50A)	7.5AH			
	1 hour rate (5.27A)	5.27AH			
	15minute rate (17.5A)	4.38AH			
Capacity affected by Temperature	40°C (104°F)	103%		Standby	No limit on Initial Charging Current Voltage 13.5V~13.8V at 25°C(77°F) Temp. Coefficient - 20mV/°C
	25°C (77°F)	100%			
	0°C (32°F)	86%			

Constant Current (Amp) and Constant Power (Watt) Discharge Table (25°, 77°F)

Time(minute) Final voltage/Cell / Amp/Watt/Cell	5 / 1.3	10 / 1.3	15 / 1.3	20 / 1.3	30 / 1.6	45 / 1.6	60 / 1.67	120 / 1.7	180 / 1.75	300 / 1.75	600 / 1.75	1200 / 1.8
A	39.69	24.30	17.5	13.93	10.13	7.29	5.27	3.16	2.31	1.50	0.81	0.43
W	67.23	46.25	35.0	27.38	20.01	14.50	10.45	6.32	4.54	3.00	1.62	0.86

www.akku-partner.de